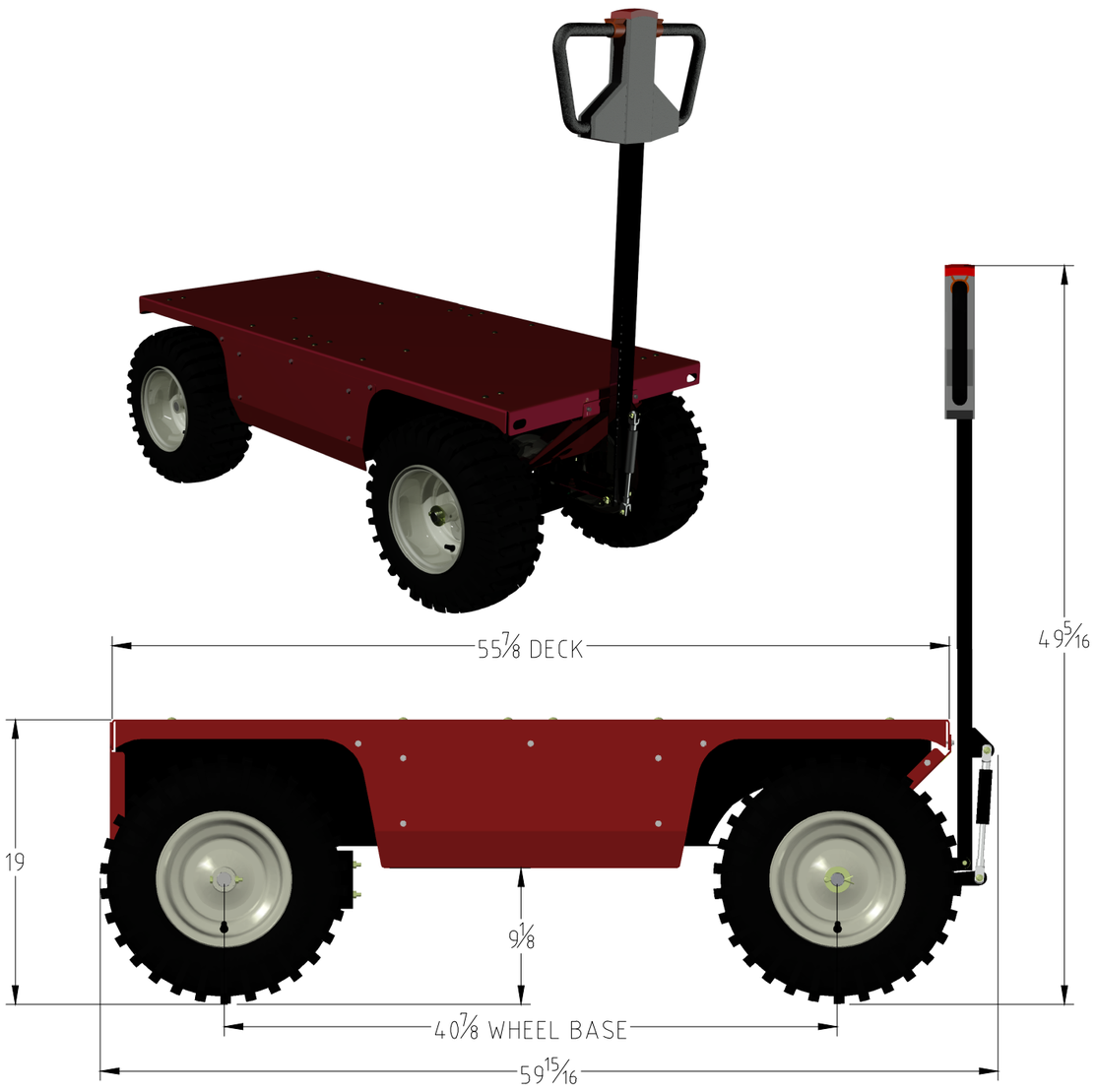

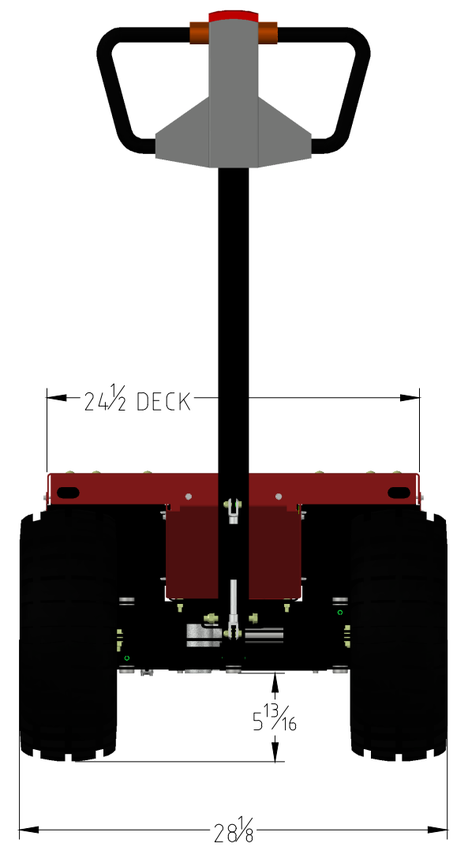

SPECIFICATIONS

1. GVWR:
   - 1.1. 2,480 LBS (16X6.50-8 4 PLY TIRES)
2. TARE WEIGHT:
   - 2.1. 290 LBS (STEEL)
3. MAXIMUM PAYLOAD
   - 3.1. 2,190 LBS
4. POWER SOURCE:
   - 4.1. OPTION: 12VDC 50AH DEEP CYCLE LEAD ACID BATTERY
   - 4.2. 12VDC 55AH AGM GEL BATTERY (46 LBS) STANDARD (BOOSTABLE)
   - 4.3. OPTION: SECOND BATTERY 110AH RESERVE (BOOSTABLE)
   - 4.4. OPTION: 12VDC 100AH LiFePO4 BATTERY (18 LBS) (NOT BOOSTABLE)
5. CONTROLLER:
   - 5.1. PULSE WIDTH MODULATION VARIABLE SPEED FOR/REV 1000W 100A MAX OUTPUT
6. INTERFACE:
   - 6.1. PALLET JACK STYLE HANDLE
   - 6.2. IP 55 RATED
   - 6.3. KEYED POWER ON/OFF
   - 6.4. RH & LH THUMB ROR/NEU/REV POTENTIOMETER
   - 6.5. LOW SPEED ON/OFF TOGGLE CONTROL
   - 6.6. 85Db HORN
   - 6.7. LED VOLTAGE LEVEL INDICATOR
   - 6.8. LOW VOLTAGE (10V) INDICATOR
   - 6.9. HIGH SPEED CONTROLLER TEMP INDICATOR
7. CHARGING:
   - 7.1. BUILT-IN AUTO SHUT OFF 6A 110V/220V IP66 RATED MARINE
     - 7.1.1. CHARGE TIME 9.2HRS FOR ONE 12V 55AH AGM BATTERY
     - 7.1.2. CHARGE TIME 18.3HRS FOR TWO 12V 55AH AGM BATTERIES
   - 7.2. STAND ALONE AUTO SHUT OFF 20A 110V LIFEPO4 CHARGER
     - 7.2.1. CHARGE TIME 5HRS FOR ONE 12V 100AH LIFEPO4 BATTERY
     - 7.2.2. CHARGE TIME 10HRS FOR TWO 12V 100AH LIFEPO4 BATTERIES
8. MOTOR:
   - 8.1. ELECTRIC MOTOR 12VDC 60A 1.3HP 3600RPM NOM,
   - 8.2. WORM GEARBOX 90:1 RATIO OUTPUT SHAFT 10.3 FT-LB @ 35 RPM
9. BRAKING:
   - 9.1. PULSE MODULATED MANUAL CONTROL OR PREPROGRAMMED DEAD MAN BRAKING.
10. REAR AXLE:
   - 10.1. 1"Ø SOLID AXLE WITH GREASED SPHERICAL SELF ALIGNING BALL BEARING WITH SHEAR PIN CHAIN DRIVE SPROCKET.
11. CHAIN DRIVE:
   - 11.1. #50 STAINLESS STEEL ROLLER CHAIN
   - 11.2. STANDARD RATIO: 1:1 - 10.3 FT-LB TORQUE (1.7MPH, 2.7KM/H)
   - 11.3. OPTION: RATIO: 1.4:1 - 14.5 FT-LB TORQUE (1.2MPH, 1.9KM/H)
   - 11.4. OPTION: RATIO: 1.6:1 - 16.1 FT-LB TORQUE (1.1MPH, 1.7KM/H)
   - 11.5. OPTION: RATIO: 2.7:1 - 27.5 FT-LB TORQUE (0.6MPH, 1KM/H)
12. FRONT AXLE:
   - 12.1. RIGID CHANNEL WITH STEERING LOCK POSITION
   - 12.2. HEAVY DUTY UPRIGHTS WITH 7/8"Ø SPINDLES, PUSH IN PTFE LINED BUSHINGS.
   - 12.3. ACKERMANN STEERING GEOMETRY
   - 12.4. CONTROL HANDLE GAS SPRING COUNTERWEIGHT 560N

REV.	DESCRIPTION	DATE	BY
1	UPDATED HANDLE	21SEP21	A.REID
0	ISSUED FOR USE	05DEC19	A.REID

BREAK ALL SHARP EDGES
CHAMFERS 0.015"
RAD. & FILLET 0.125"

3RD ANG. PROJ

THE INFORMATION ON THIS DRAWING IS THE SOLE PROPERTY OF KRAMBLE INDUSTRIES INC. REPRODUCTION IN WHOLE OR IN PART EITHER HARD COPY OR ELECTRONIC IS STRICTLY PROHIBITED WITHOUT OUR WRITTEN CONSENT

STANDARD TOLERANCES	
DIMENSION (IN)	TOLERANCE (IN)
XX.XXX	±0.005
XX.XX	±0.020
XX.X	±0.040
FRAC.: ±1/16	ANGULAR: ±1°

SECTION:	SPECIFICATION	
SCALE:	1:10	
DESIGN. BY:	A.REID	05DEC19
DRAWN BY:	A.REID	05DEC19
APP. BY:		

KRAMBLE INDUSTRIES

HEAVY DUTY UTILITY CART 24-1/2" X 56" DECK

DRAWING NUMBER	REV.
38000-2019	1

ALAN REID

9/21/2021 3:40:26 PM

\\KRAMBLE-SERVER\BREHON AG\KRAMBLE INDUSTRIES\PRODUCTS\UTILITY CART\CAD\38000 UTILITY CART 24 X 56_38000-2019-R1 SPECIFICATION UTILITY CART 24 X 56